Flashing Enquiry Form

Once completed, please fax back to **EZ Roof** on: 0845 686 0629

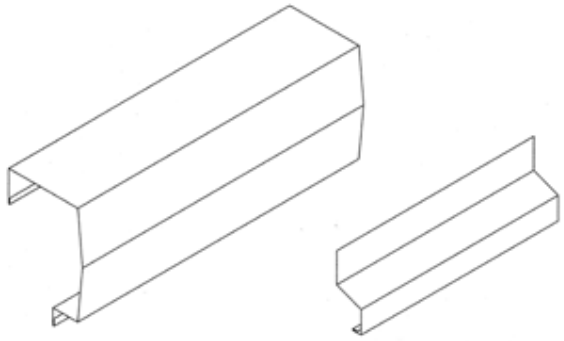

Flashing Details:

Quantity		Materials	
Girth		Mark	
Thickness		Colour	
Length		Date Required	

Contact Name: _____ Date: _____

Company: _____

Telephone: _____

Fax: _____